Advantages for users

High working safety, long life.
Low maintenance costs.
High K_{VS} values, no dead spaces.
Their operation is favourable in relation to our environment.
Possibility od drive choice for particular use.

CONTROL VALVES

SRV - 12

SRV - 22

SRV - 14

SIGMA

Advantages

Compact, robust design.
Very easy maintenance.
Flow is favourably influenced by their body design.
Pneumatic and electric drives.

Use

The control valves of SRV type are designed specially for industrial purposes for pressures ranging form 1.6 MPa to 4 MPa and for max. working temperature 300°C.
There is a great variety of use of them.

SIGMA ČESKÁ TŘEBOVÁ

CONTROL VALVE SRV 12, 22, 14

PN 16 PN 40

TECHNICAL EQUIPMENT

Kinds of valves:	Single-seat control valve SRV 12 fig. 1 Souble-seat control valve SRV 22 fig. 2 Three-way mixing valve SRV 14 fig. 3
Nominal diameters:	DN 15 - DN 200
Nominal pressures:	PN 16, PN 40
Flanges:	In accordance with Czechoslovak standard ČSN 13 1211 and 13 1213
Sealing surface of flanges	Rough sealing surface in accordance with ČSN 13 1061.0 Sealing surface with circular recess in accordance with ČSN 13 1061.2
Length:	In accordance with ČSN 13 3042
Working temperatures	- 20°C to 300°C
Body	Material cast steel 42 2643 Austenitic stainless steel 42 2931
Stuffing box cover:	Stuffing box cover with sealing Stuffing box cover with cooler Material - same as body

Internal parts

Valve plug:	SRV 12 - parabolic valve plug SRV 22 - double-seat parabolic valve plug SRV 14 -valve plug with cut-outs Material:: 17 027 or 17 242
Flow characteristic::	SRV 12 and 22 - linear or equal SRV 14 approximately linear
Values k_{vs} :	0,5 - 630 m^3/h (other on basis of agreement)
Valve seat:u	Pick-off seat, screwed in Material: 17 023 or 17 246
Leakage:	Sealing in seat-metal to metal 0,05 % of k_{vs} with single-seat valves 0,5 % of k_{vs} with double-seat and mixing valves
Stuffing box::	Asbestosless sealing to 300°C max. PTFE sealing to 200°C max.
Control ratio:	1 : 50
Electric actuator:	Design series KLIMACT KT I and KLIMACT KT II, MODACT
Pneumatic diaphragm actuator:	Design series 526 61 and 526 63 Provided with positioner
Manual control:	With electric actuator by crank or hand- - operated wheel on the actuator With pneumatic actuator by hand-operated wheel, for erection

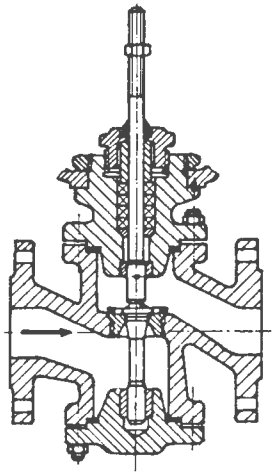

Fig. 1
Single-seat control valve SRV 12

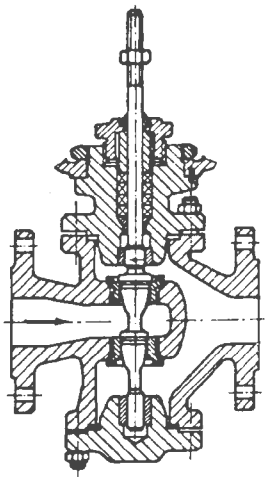

Fig. 2
Double-seat control valve SRV 22

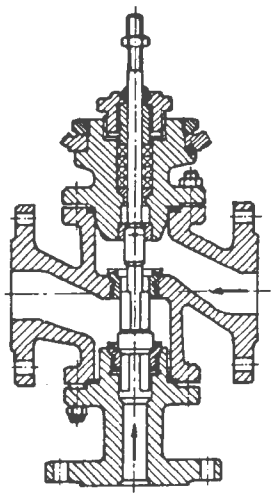

Fig. 3
Three-way mixing valve SRV 14

PN 16 PN 40

Composition of registered number

for orders of control valves SRV type

SRV E 12 1 1 1 1 1 1 16 / 1 40

Kind of control	(1)	E
Type number	(2)	12
Flow characteristic	(3)	1
Flow coefficient K_{vs}	(4)	1
Adjustment of flange sealing surfaces	(5)	1
Material	(6)	1
Kind of sealing	(7)	1
Design of stuffing box cover	(8)	1
Nominal pressure PNr	(9)	16
Highest working temperature	(10)	1
Nominal diameter		40

1 - **Kind of control**

E - El. actuator
P - pneumatic actuator

2 - **Marking of valve type**

12 - single-seat valve
22 - double-seat valve
14 - three-way mixing valve

3 - **Flow characteristic**

1 - Linear
2 - with equipercentage characteristic

4 - **Flow coefficient k_{vs}**

1, 2, 3, 4, 5 - for SRV 12
6, 7, 8 - for SRV 22
9 - for SRV 14

5 - **Machining of sealing surfaces of flanges**

1 - Rough sealing rurface for PN 16 and PN 40 in accordance with ČSN 13 1061.0
2 - Sealing surface with circular recess for PN 40 in accordance with ČSN 13 1061.2

6 - **Material**

1 - Carbon steel for casting 42 2643
2 - Austenitic stainless steel 42 2931

7 - **King of sealing**

1 - Asbestosless sealing
2 - Sealing collars of teflon (to 200°C)

8 - **Design of stuffing box cover**

1 - Normal stuffing box cover
2 - Stuffing box cover with cooler

9 - **Nominal pressures**

16 - PN 16
40 - PN 40

10 - **Highest working temperature**

1 - to 200°C
2 - to 300°C

PN 16 PN 40

Basic flow characteristic

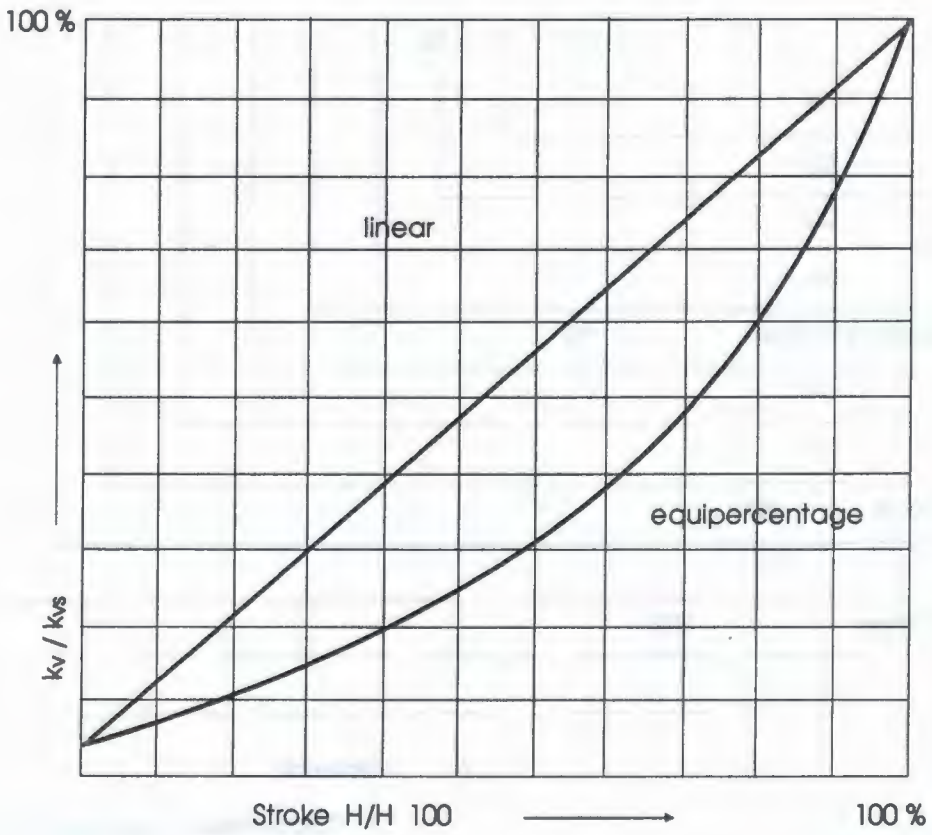

DN	k_{VS} values - m^3/h								
	SRV 12					SRV 22			SRV 14
	1	2	3	4	5	6	7	8	9
15	3,2	2	1,3 x/	0,8 x/	0,5 x/	-	-	-	-
25	8	5	3,2	-	-	10	6	4	8
40	20	12,5	8	-	-	25	16	10	20
50	32	12,5	-	-	-	40	25	16	32
65	50	20	-	-	-	63	25	-	50
80	80	50	32	-	-	100	63	40	80
100	125	80	50	-	-	160	100	63	125
150	250	125	-	-	-	400	250	160	320
200	-	-	-	-	-	630	250	-	-

x/ Delivered with linear characteristic only
Other k_{VS} values after consultation with manufactured

ACTUATORS

Elektrically controlled actuators

Design series:

KLIMACT KT I for shifting forces from 3,2 kN to 6,3 kN

KLIMACT KT II for shifting forces from10 to 20 kN

MODACT for shifting forces 6,3 kN to 25 kN

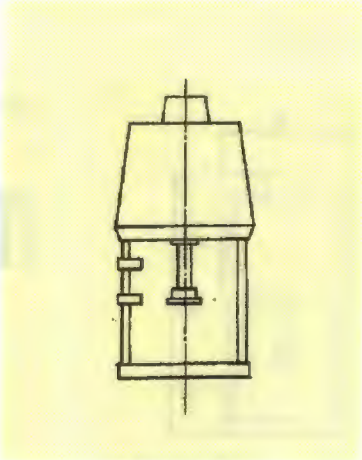

KLIMACT KT I
KLIMACT KT II

Design:

For environmental temperature form - 25°C to 55°C
Tropical design is possible
Setting of closing force or end positon by means of end switches or force switches

Manual control is possible. With CLIMACT type by additional crank, with MODACT type by hand wheel.

Mounting position: optional, but electric part of drive must not point down-wards.

Electric connection:

On terminal box or by connector
El. voltage: 220 V - 50 Hz
Shield: IP 54

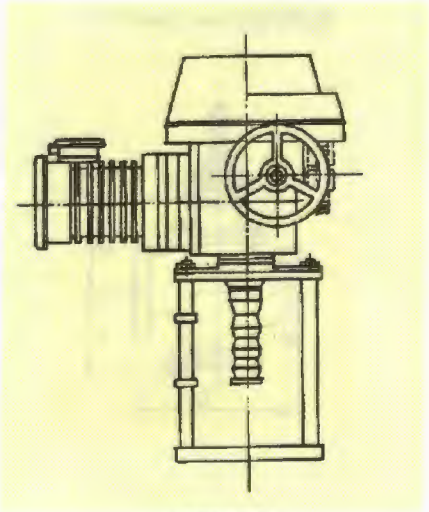

MODACT

Technical data

Drive design	Shifting force kN	Shifting speed mm/min	Stroke	Weight kg	Accessories
KLIMACT KT I	3,2 - 6,3	16 32 63	50	8,-	Level resistance transmitter 2x1000 Ohm 2x100 Ohm 1x100 Ohm
KLIMACT KT II	10,- - 20,-	20 32 50 80	100	20,-	Level resistance transmitter 2x100 Ohm 1x100 Ohm
MODACT	6,3 - 25,-	32 50 63 100	100	40,-	Level resistance transmitter 2x100 Ohm 1x2000 Ohm 2x2000 Ohm 1x100+1x200 Ohm Level induction transmitter 0(4)-20 mA

Other design of drive is possible, when required

SINGLE-SEAT MIXING VALVE SRV 12 PN 16 PN 40

El actuator KLIMACT KT I, KLIMACT KT II and MODACT design

Pneumatic diaphragm actuator 526 61 and 526 63 design

Dimensions

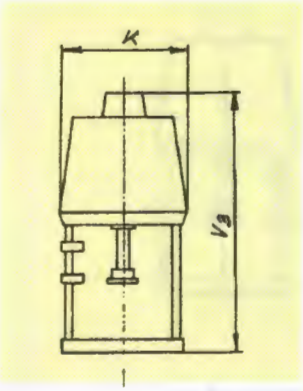

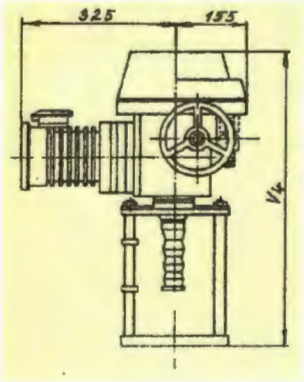

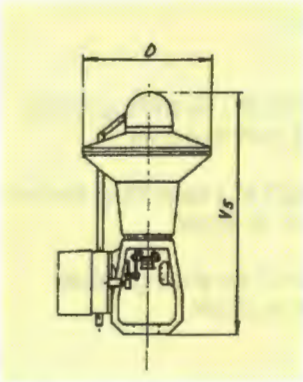

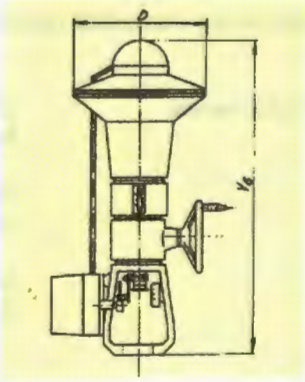

Stuffing box cover 00

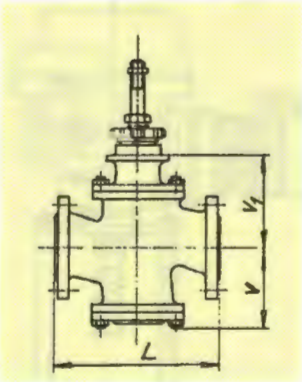

Stuffing box cover 01

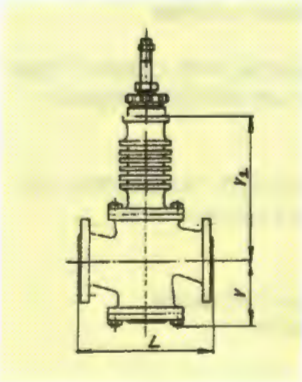

Pneumatic actuator for valves to DN 100 only

DN		15	25	40	50	65	80	100	150
L		130	160	200	230	290	310	350	480
V		72	85	110	130	155	175	190	260
V_1		118	120	145	170	185	200	220	305
V_2		215	210	260	285	300	320	335	445
V_3	KT I	400	400	400	-	-	-	-	-
	KT II	-	-	-	560	560	560	560	560
V_4		650	650	650	650	650	650	650	710
V_5		487	487	487	650	650	650	650	-
V_6		663	663	663	914	914	914	914	-
Lift		16	16	25	25	25	40	40	63
Weight kg	00	6,3	11,8	21,5	30,-	45,5	67,-	78,-	197,-
Valve + stuffing box cover	01	10,-	16,3	29,4	39,3	57,6	81,8	95,6	240,-
D		250	250	250	380	380	380	380	-
K		168	168	168	204	204	204	204	204

DOUBLE -SEAT CONTROL VALVE SRV 22 PN 16 PN 40

El. actuator KLIMACT KT I, KLIMACT KT II and MODACT design

Pneumatic diaphragm actuator 526 61 and 526 63 design

Dimensions

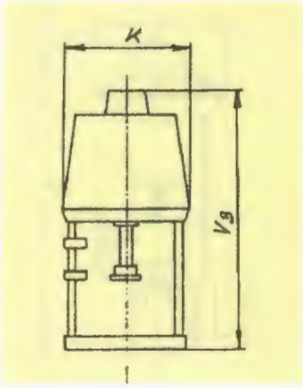

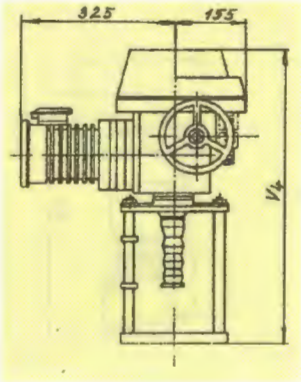

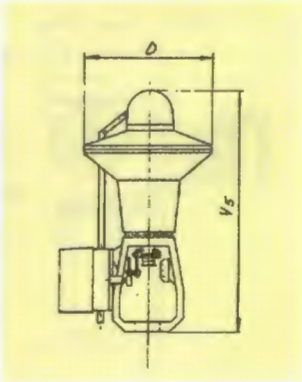

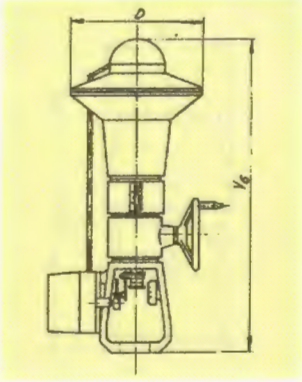

Stuffing box cover 00

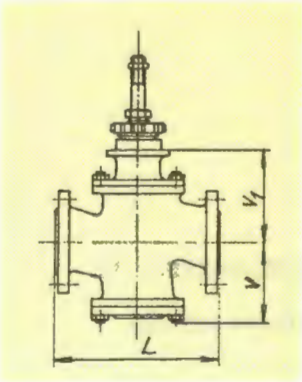

Stuffing box cover 01

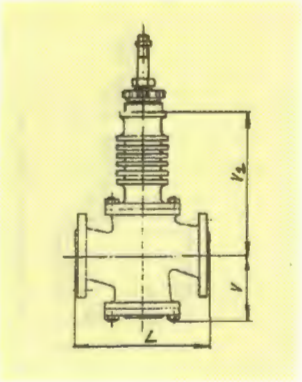

Pneumatic actuator for valves to DN 100 only

DN		25	40	50	65	80	100	150	200
L		160	200	230	290	310	350	480	600
V		100	125	150	165	200	215	310	385
V_1		135	160	190	220	230	250	355	430
V_2		220	280	305	310	345	360	490	575
V_3	KT I	400	400	-	-	-	-	-	-
	KT II	-	-	560	560	560	560	614	614
V_4		650	650	650	650	650	650	710	710
V_5		487	487	650	650	650	650	-	-
V_6		663	663	914	914	914	914	-	-
Lift		16	25	25	25	40	40	63	80
Weight kg	00	12,7	24,-	33,-	50,-	71,-	93,-	232,-	373,-
Valve + stuffing box cover	01	17,2	32,-	42,3	62,-	86,-	110,6	275,5	438,6
D		250	250	380	380	380	380	-	-
K		168	168	168	204	204	204	204	204

THREE-WAY MIXING VALVE SRV 14 PN 16 PN 40

El. actuator KLIMACT KT I, KLIMACT KT II and MODACT design

Pneumatic diaphragm actuator 526 61 and 526 63 design

Dimensions

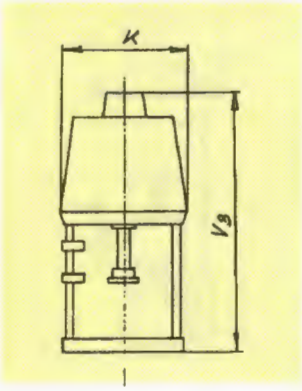

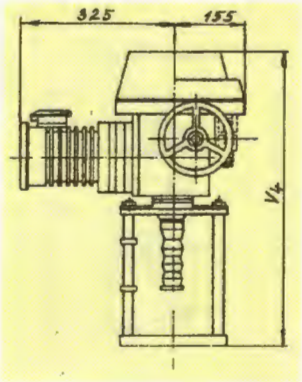

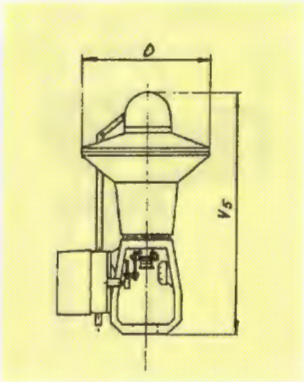

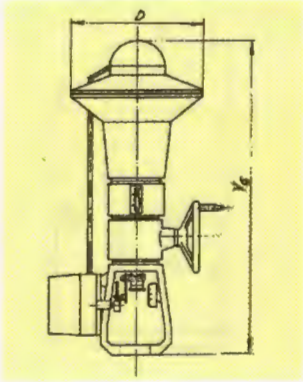

Stuffing box cover 00

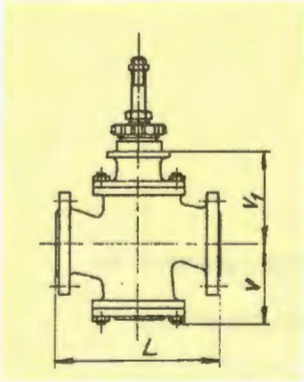

Stuffing box cover 01

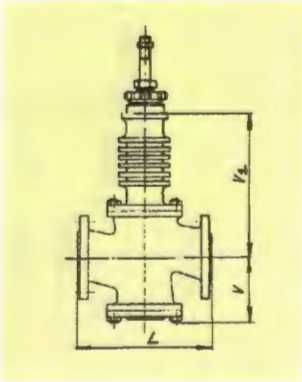

Pneumatic actuator for valves to DN 100 only

DN		25	40	50	65	80	100	150
L		160	200	230	290	310	350	480
V		130	180	195	210	246	260	325
V_1		120	145	170	185	200	220	305
V_2		210	260	285	300	320	335	445
V_3	KT I	400	400	-	-	-	-	-
	KT II	-	-	560	560	560	560	560
V_4		650	650	650	650	650	650	710
V_5		487	487	650	650	650	650	650
V_6		663	663	914	914	914	914	914
Lift		16	25	25	25	40	40	63
Weight kg	00	13,30	25,-	33,-	49,5	67,-	86,-	210,-
Value + stuffing box cover	01	17,8	32,9	42,3	61,6	81,8	103,6	253,5
D		250	250	380	380	380	380	380
K		168	168	168	204	204	204	204

Pneumatic diaphragm actuators

Kind of drive	Pneumatic diaphragm actuator with positioner
Design:	526 61 and 526 63
Function:	Air is opening (spring is closing) Air is closing (spring is opening)
Mounting position:	optional
Surrounding temperature:	-25°C to 70°C
Adjustment:	Tropical adjustment suitable for this climate

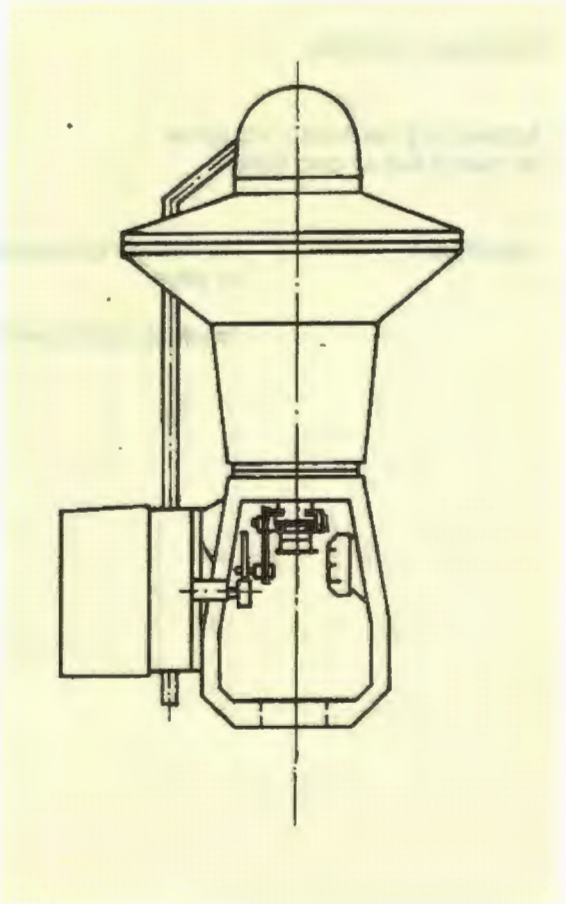

Technical data

Design	For pneumatic actuator	Stroke	Number of revolutions of hand wheel for lift	Operating force kN	For valves DN
910149713	526 61	16	12	6,25	15 - 25
910245913		25	18,75		40
910150013	526 63	25	12,5	15,75	50 - 65
910246013		40	20		80 - 100

Manual control

Applied to pneumatic actuators
for design 526 61 and 526 63

Adjustment: For mounting bezween stirrup and module of drive

Tropical adjustment is possible

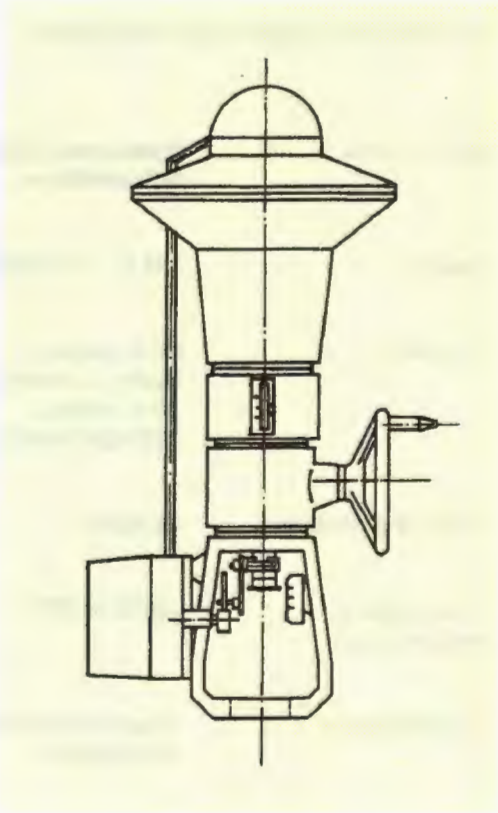

Technical data

Drive design	Working surface of diaphragm cm^2	Stroke	Working range of spring	Function	Design	Weight kg
526 61	250	16-25	20-100 40-200	Air is opening /spring is closing/ Air is closing /spring is opening/	with positio-ner	14,5
526 63	630	25-40	20-100 40-200			33,5

Feeding pressure of corrector, max 250 kPa ± 10 %

Calculation instructions for determination k_{vs} coefficient			
		Pressureloss	
		$\Delta p < \frac{p_1}{2}$ $p_2 > \frac{p_1}{2}$	$\Delta p \geq \frac{p_1}{2}$ $p_2 \leq \frac{p_1}{2}$
Liquid	K_v	$= \frac{Q}{100} \sqrt{\frac{\varsigma_1}{\Delta p}}$	
Gas	K_v	$= \frac{Q_n}{5141} \sqrt{\frac{\varsigma_n \cdot T_1}{\Delta p \cdot p_2}}$	$= \frac{2 \cdot Q_n}{5141 \cdot p_1} \sqrt{\varsigma_n \cdot T_1}$
Superheated steam	K_v	$= \frac{Q_m}{100} \sqrt{\frac{v_2}{\Delta p}}$	$= \frac{Q_m}{100} \sqrt{\frac{2 \cdot v}{p_1}}$
Sutarated steam	K_v	$= \frac{Q_m}{100} \sqrt{\frac{v_2 \cdot x}{\Delta p}}$	$= \frac{Q_m}{100} \sqrt{\frac{2 \cdot v \cdot x}{p_1}}$

Value	Unit	Designation
K_v	m^3/hod.	Flow coefficient under nominal flow conditions
Q	m^3/hod.	Flow in m^3/hour during operation (T_1, p_1)
Q_n	m^3/hod.	Flow in m^3/hour under normal conditions (0°C, 0,101 MPa)
Q_m	kg/hod.	Flow in kg/hour during operation (T_1, p_1)
p_1	MPa	Absolute pressure before control valve
p_2	MPa	Absolute pressure after control valve
Δp	MPa	Pressure drop on control valve (p_1 - p_2)
ς_1	kg/m^3	Specific density of working matter during operation (T_1, p_1)
ς_n	kg/m^3	Specific density of gas kunder normal conditions (0°C, 0,101 MPa)
v_2	m^3/kg	Specific volume of steam at temperature T_1 and pressure p_2
v	m^3/kg	Specific volume of steam at temperature T_1 and pressure $p_1/2$
T_1	K	Absolute temperature before valve ($T_1 = 273 + t_1$)
x	1	Volume of saturated steam in wet steam

SIGMA Česká Třebová s. p.
560 21 Česká Třebová

Telefon (0465 93) 62 111

Telex 196308

Fax (0465 93) 3350

CZECHOSLOVAKIA

PRODUCES
AND
DELIVERS

SIGMA
ČESKÁ TŘEBOVÁ s. p.

Our production programe

Control fittings:	Control valves for steam, starting, feeding, injection to PN 40 Hotwater control valves to PN 16
Reducing valves:	Reducing valves for water to PN 10 Reducing valves to PN 16
Fitting for nuclear power plants:	Corrugated type closing valves DN 10 - PN 200
Safety valves:	Safety valves with additional loading to PN 400 - licence Bopp and Reuther Safety valves with low lift PN 16, PN 100, PN 250 DN 6, 15, 25 Special design
Fittings for biotechnology, food industry and farmaceutical industry:	Diaphragm closing valves with sealing partition to PN 10 with hand wheel and pneumatic drive Diaphragm clossing valves with sealing seat to PN 6 with hand wheel and pneumatic drive
Closing valves	Highpressure closing valves DN 6 - PN 400 Closing brass and bronze valves DN 15 - DN 150 PN 16, PN 40 Closing aluminium valves PN 10 Closing valves for extinguishing appliances PN 150
Valves and cocks for pressure ganges:	Valves PN 250, PN 640 and accessories Valves with checking pin PN 250, PN 640 Cocks PN 16 Cocks with checking pin PN 16 Condensing loops PN 250
Fittings for heating:	Steam traps PN 3 Feeding and discharging cocks PN 6 Vent valves PN 6
Fittings of plastic materials:	Ball cocks PN 10 Liquid filters PN 10
Forgings of non-ferrous metals:	Die forgings of brass, bronze to 20 kg